Double Shaft Mounting Block

11-508	**with locking handle**
11-509	**with locking 5/16 SHCS**

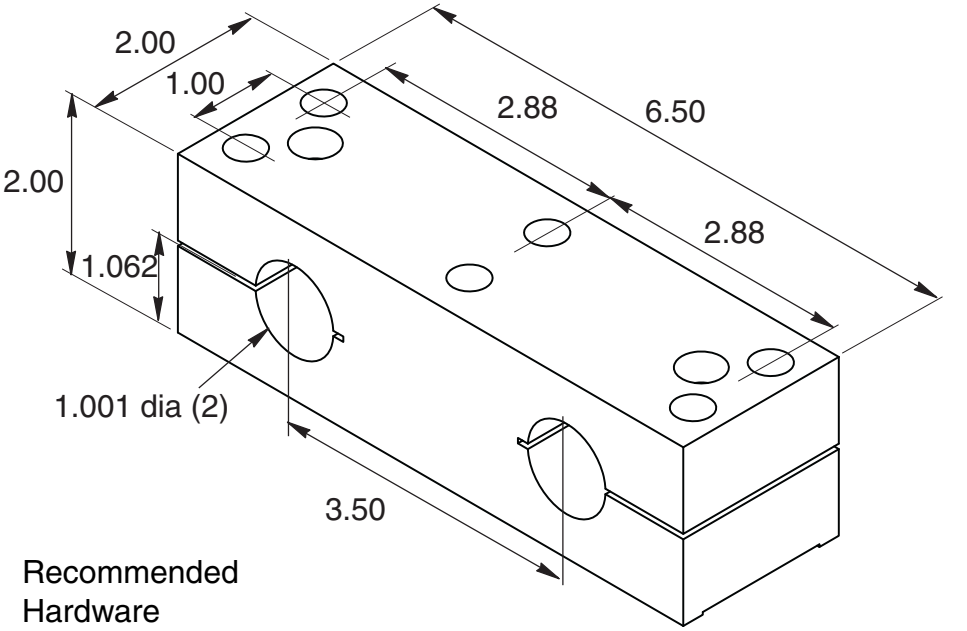

Recommended
Hardware
(4) 11-224 SHCS
(4) 11-205 T-nut

For shafts, see page 503

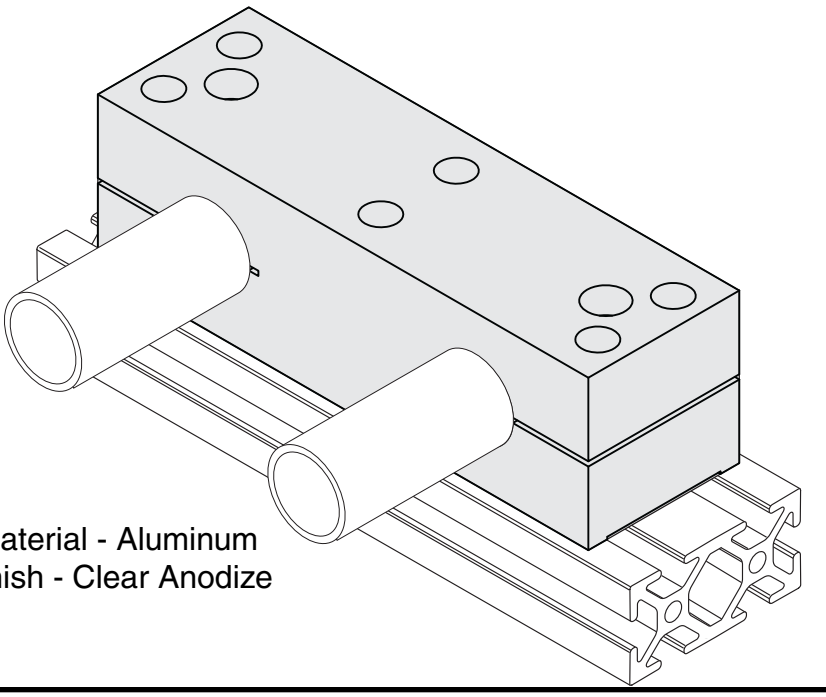

Material - Aluminum
Finish - Clear Anodize

9116 Virginia Road Lake in the Hills, IL 60156 Telephone 847/458-0993
FAX 847/458-0934 e-mail: info@frame-world.com web: frame-world.com